Anti-windup synthesis using Riccati equations[‡]

Jorge Sofrony [†], Matthew C. Turner [*†] and Ian Postlethwaite [†]
Control and Instrumentation Research Group,
Department of Engineering,
University of Leicester,
Leicester,
LE1 7RH, UK.
{ js246,mct6,ixp } @ le.ac.uk

Abstract

The aim of this paper is to give a novel solution to the full order anti-windup (AW) compensation problem for stable systems with input saturation. The solution is obtained by "completing the square" in three steps and requires the solution to a single bounded-real Riccati equation, characterised by the open-loop plant's $\mathcal{H}_\infty$ norm. The Riccati equation plays the role of the LMI's usually found in anti-windup synthesis, but, in addition to its obvious numerical advantages, it yields a family of anti-windup compensators with the same $\mathcal{L}_2$ performance. This family of compensators is parameterised by a matrix which is intimately linked with both the poles of the anti-windup compensator and the robustness properties of the closed-loop saturated system. Thus, this matrix allows a robust anti-windup problem to be solved in a straightforward and intuitive manner. The effectiveness of the proposed technique is demonstrated on a simple example.

Keywords: anti-windup, saturation, robustness

1 Introduction

Two of the most frequent problems ecountered by control engineers are model uncertainty and actuator saturation. Input saturation has been tackled in a number of different ways over the years, including the design of one-shot linear controllers which directly account for saturation ([15, 12]); model predictive control, where the control constraints are incorporated into the optimisation procedure; and anti-windup techniques, whereby an existing linear controller - designed for the linear unconstrained plant - is augmented with an additional linear element which becomes active only when saturation occurs ([8, 3]).

This paper concentrates on the latter methodology: anti-windup compensation. Such a technique is practically important as it gives a simple, intuitive and potentially computationally efficient way of handling input constraints, while not restricting the initial linear controller design. The technique complements the existing controller, preventing a re-design of the baseline control algorithm, yet it has the power to limit performance degradation during saturation periods. Although such an approach has its roots in industrial control, over the last twenty years or so, the research community has proposed more systematic AW designs. A full review of

[*] Corresponding author
[†] Work supported by the UK Engineering and Physical Science Research Council
[‡] A preliminary version of this paper was presented at the 2005 IFAC World Congress

these designs is beyond the scope of this paper but the interested reader can consult [10, 1, 21, 29, 25, 28] and references therein for details.

One of the common elements in many of these recent AW techniques is that their synthesis is dependent on a set of linear matrix inequalities (LMI's) being feasible ([11, 6, 25, 28, 16]). Although there are several free and commercial packages available for solving LMI problems, for large and ill-conditioned problems, they are often prone to numerical errors and, arguably, some design insight is lost. As will be seen later, the method proposed in this paper eliminates LMI's from the design process, and instead relies on the solution to a single Riccati equation of bounded-real type. Such an approach combines the reliable numerical procedures used for Riccati equation solutions with a degree of flexibility, in the form of a diagonal, positive definite matrix, which is absent in the corresponding LMI approach.

Another common characteristic of many recent anti-windup techniques is the lack of attention given to robustness. Although robustness to uncertainty has been studied in robust control literature for many years, it is conspicuously absent from most anti-windup literature. The implicit assumption present in these papers appears to be that the saturated closed-loop system with anti-windup will inherit similar robustness properties to those of the nominal linear system. As shown in [23], this is not always the case.

An early attempt to consider robustness in the design of saturated feedback systems was made in [20], although most of the results contained therein pertained to one-shot constrained control solutions rather than anti-windup *per se*. With few exceptions, the main results on robustness analysis of anti-windup systems are contained within [22], [23], and [4]. The results of [22] consider only static uncertaintes, while those in [4] allow a modification of the nominal linear closed-loop, leading to the so-called *weakened* anti-windup problem. We follow the work of [23] where standard anti-windup is considered, but the uncertainty is allowed to be dynamic, and of the additive type used in standard linear robust control ([5, 17]. This allows a general and methodical treatment of uncertainty, and one which is closely linked to that used in practice. It transpires that such a treatment leads to elegant and intuitive results when approached using the Riccati equation technique advocated in this paper.

The paper is organised as follows. Firstly, the problems we seek to solve are defined and then followed by sections describing their solutions. Particular attention is devoted to the interplay between the robustness properties of the anti-windup compensator and a free parameter, the so-called "stability multplier". The theoretical results are followed by an academic example in which the strengths of the Riccati-based scheme are demonstrated and compared with other useful techniques. Finally we draw some brief conclusions.

1.1 Assumptions and Notation

The notation used is standard throughout. The $\mathcal{L}_p$ norm of the time-dependent vector $y(t) \in \mathbb{R}^{n_y}$ is denoted as $\|y\|_p$ and the induced $\mathcal{L}_p$ norm of a possibly nonlinear operator $\mathcal{Y} : \mathbb{Y}_1 \to \mathbb{Y}_2$ from one Lebesque space to another, as $\|\mathcal{Y}\|_{i,p}$. To avoid notational clutter the time variable (t) and the Laplace argument (s) are omitted if no confusion is believed to arise. The Euclidean norm of the vector $y(t)$ is given by $\|y(t)\| = \sqrt{y(t)'y(t)}$. The *distance* between a vector $y(t)$ and a compact set $\mathcal{Y}$ is denoted by $dist(y, \mathcal{Y}) := \inf_{\omega \in \mathcal{Y}} \|y - w\|$. $\mathcal{R}^{i \times j}$ represents the space of all the real rational $i \times j$ transfer function matrices, and $\mathcal{RH}_\infty$ the subset which are analytic in the closed right-half complex plane with supremum on the imagnary axis.

2 Problem formulation

We consider the stable, FDLTI (finite dimensional linear time invariant) plant

$$G(s) \sim \left\{ \begin{array}{rcl} \dot{x} & = & Ax + Bu_m \\ y & = & Cx + Du_m \end{array} \right. \tag{1}$$

where $x \in \mathbb{R}^{n_p}$ is the plant state, $u_m \in \mathbb{R}^m$ is the plant input (saturated control signal) and $y \in \mathbb{R}^q$ is the plant output, which is fed back to the controller. For simplicity disturbances are not considered although they can easily be accounted for (see [27],[25]) The *nominal linear plant* transfer function is denoted as:

$$G(s) \sim \left[\begin{array}{c|c} A & B \\ \hline C & D \end{array} \right] \in \mathcal{RH}_\infty \tag{2}$$

The need for the global stability assumption will become clear in the proofs later on.

The plant input u_m is given by the nonlinear saturation function where:

$$u_m = \mathrm{sat}(u) = [\mathrm{sat}(u_1), \ldots, \mathrm{sat}(u_m)]'$$

and $\mathrm{sat}(u_i) = \mathrm{sign}(u_i) \min\{|u_i|, \bar{u_i}\}$, where $\bar{u_i} > 0 \, \forall i \in \{1, \ldots, m\}$. If there is no saturation present, $\mathrm{sat}(u) \equiv u$, and *nominal linear closed-loop* dynamics govern the system. It is also convenient to define the deadzone function, $Dz(.)$, related to the saturation function through the identity

$$\mathrm{Dz}(u) = u - \mathrm{sat}(u) \tag{3}$$

Note that, for all $u \in \mathcal{U} \subset \mathbb{R}^m$ where

$$\mathcal{U} := [-\bar{u}_1, \bar{u}_1] \times \ldots \times [-\bar{u}_m, \bar{u}_m] \tag{4}$$

it follows that $\mathrm{Dz}(u) = 0$. A charactersitic of the deadzone, central to the results derived here, is that $\mathrm{Dz}(.) \in \mathrm{Sector}[0, I]$, as defined below.

Definition 1 *The decentralised nonlinearity* $\mathcal{N} = \mathrm{diag}(\eta_1, \ldots, \eta_m)$ *is said to belong to* $\mathrm{Sector}[0, I]$ *if the following inequality holds:*

$$\eta_i(u_i)^2 \leq \eta_i(u_i)u_i \leq u_i^2 \quad \forall \, i \in \{1, \ldots, m\} \tag{5}$$

This definition will later allow us to formulate an $\mathcal{H}_\infty$-type optimisation problem using the Circle Criterion.

2.1 Standard AW formulation

Characterising the main objective of AW compensation is subjective but the general underlying idea is simple: we require a fast and smooth return to linear behaviour after saturation ([8], [22]). We term this objective the *true goal* of anti-windup compensation. Although many different formulations have arisen (see some of the references given earlier) few have been able to address successfully the *true* goal of AW in a general, systematic and intuitive way.

Figure 1 shows a generic anti-windup configuration, where $G(s)$ is the plant described earlier and $K(s)$ is the controller which has been designed to stabilise the nominal (un-saturated) plant and achieve some nominal

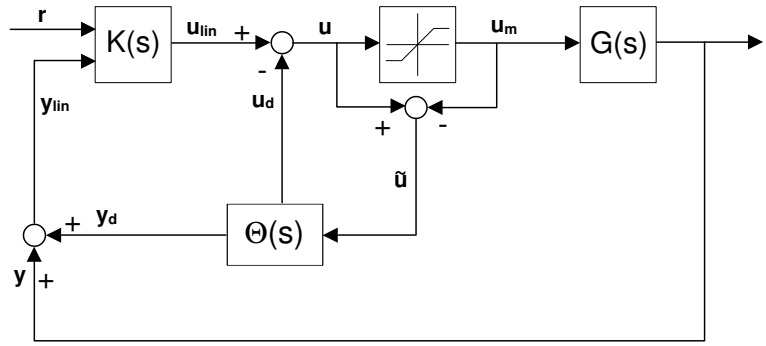

Figure 1: Generic Anti-Windup scheme

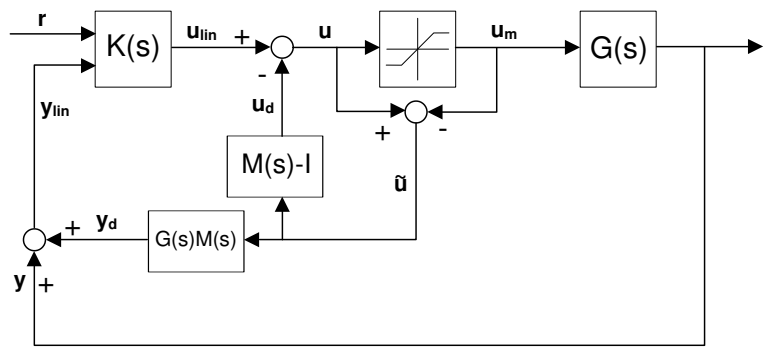

Figure 2: Conditioning with $M(s)$

performance specifications. These are standard assumptions in the anti-windup literature and are required for the anti-windup problem to make practical sense. $\Theta(s)$ is the anti-windup compensator which only becomes active once saturation has occurred. The compensator has two sets of outputs, $u_d \in \mathbb{R}^m$ and $y_d \in \mathbb{R}^q$, which are injected at the controller output and the controller input respectively.

A novel method of representing most AW schemes using a single transfer function $M(s)$ was proposed in [26]. In this work, the anti-windup compensator was parameterised by a transfer function matrix $M(s) \in \mathcal{RH}_\infty$ as shown in Figure 2. As before, the plant is $G(s)$ and the controller is $K(s)$; the reference is $r(t)$, the plant input $u_m(t)$, and the controller output $u(t)$. It was then shown that, using this parameterisation, Figure 2 could be re-drawn as Figure 3 where the closed-loop AW compensated system is decoupled into three parts: *nominal linear loop, nonlinear loop* and *disturbance filter*. This new decoupled structure provides a useful tool for the analysis of existing anti-windup schemes and the design of new ones.

From Figure 3, observe that our intuitive objectives for good anti-windup performance can be accomplished if the map from u_{lin} to y_d is made small in some sense. The problem of minimising the $\mathcal{L}_2$ gain of $\mathcal{T}_p : u_{lin} \mapsto y_d$ was considered in [25] and [23] where methods for static, low and full order AW compensation were derived based on LMI optimisation. One of the main problems with the static and low order schemes is that there is *no guarantee* that one of these schemes will globally stabilise the system in question. In contrast, there always exists a full-order AW compensator which globally stabilises a linear control system with saturation, providing the plant is open-loop stable. It is this type of compensator which the remainder of the paper will focus on.

Full-order AW compensation is that in which the order of the AW compensator is the same as that of the plant. From Figure 2, in order for our AW compensator parametrised by $M(s)$ to be full-order, pole-zero cancellations must occur between $M(s)$ and $G(s)$. In [27] it was suggested that a good choice of $M(s)$ would be a right

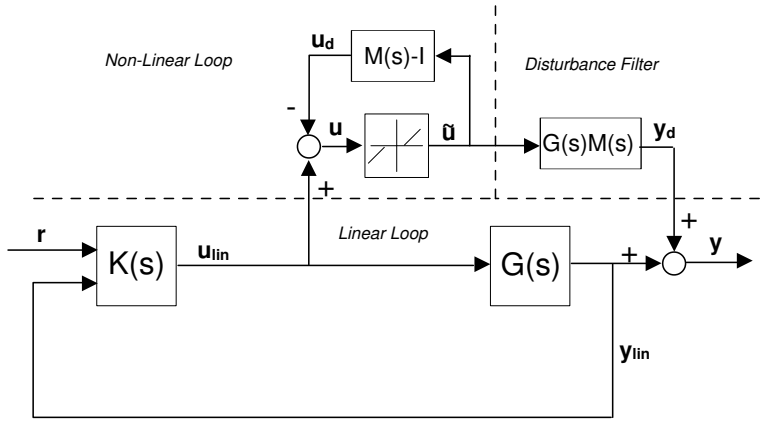

Figure 3: Decoupled structure

coprime factorization of the plant, $G(s) = N(s)M(s)^{-1}$, providing a dual representation of anti-windup compensators to that given by [8] (also used by [10] and [2]). Thus, the disturbance filter reduces to $N(s)$ and the the AW compensator is completely independent of the controller $K(s)$. A suitable representation for M and N, without introducing any extra states, is:

$$\begin{bmatrix} \Theta_1 \\ \Theta_2 \end{bmatrix} = \begin{bmatrix} M - I \\ N \end{bmatrix} = \begin{cases} \dot{x} &= (A + BF)x + B\tilde{u} \\ u_d &= Fx \\ y_d &= (C + DF)x + D\tilde{u} \end{cases} \tag{6}$$

where F is a free parameter and $A + BF$ must be Hurwitz. Thus, the problem of designing a full-order anti-windup compensator becomes that of choosing an appropriate right coprime factorisation, which in turn reduces to that of choosing an appropriate state-feedback gain matrix, F.

In the standard AW formulation we do not consider uncertainty and focus on ensuring that linear behaviour is perturbed as little as possible by any saturation events and that linear behaviour is recovered ([25, 22]). Formally, the problem we address is encapsulated in the following formulation.

Problem 1 *The AW compensator (6), is said to solve the anti-windup problem if the closed loop system in Figure 2 is stable and well-posed and the following hold:*

1. *If* $\mathrm{dist}(u_{lin}, \mathcal{U}) = 0, \quad \forall t \geq 0$, *then* $y_d = 0, \quad \forall t \geq 0$ *(assuming zero initial conditions for* $M(s)$*).*
2. *If* $\mathrm{dist}(u_{lin}, \mathcal{U}) \in \mathcal{L}_2$, *then* $y_d \in \mathcal{L}_2$.

The AW compensator is said to solve strongly the anti-windup problem if, in addition, the following condition is satisfied:

3. *The operator* $\mathcal{T}_p : u_{lin} \mapsto y_d$ *is well-defined and finite gain* $\mathcal{L}_2$ *stable.*

Essentially, a compensator solving this problem would ensure no corrective AW action is taken unless saturation occurs, assuming zero initial conditions for the compensator, and that an asymptotic recovery of linear behaviour is guaranteed. The strong version of the problem also guarantees that peformance (measured by the "gain" of the operator $\mathcal{T}_p$) is also addressed. The first part of the paper solves this problem.

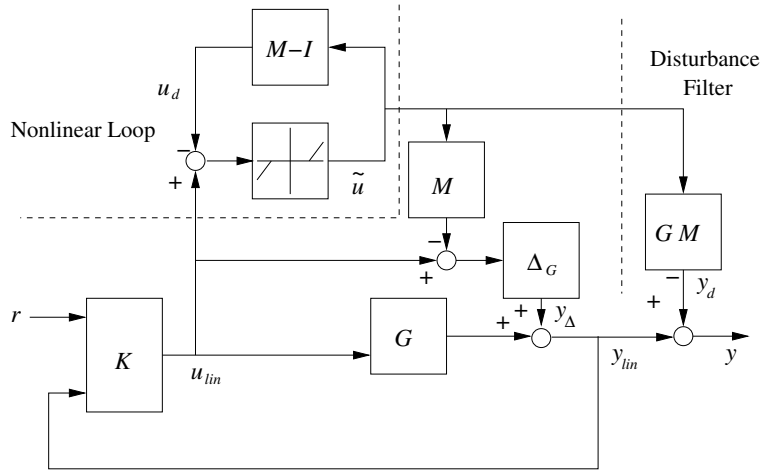

Figure 4: Anti-windup scheme with uncertainty

2.2 Robust AW Formulation

Control engineers rarely have the luxury of dealing with perfect plant models and typically the model, $G(s)$, is not a true representation of the real system. A better way of describing the *true linear plant* is

$$\tilde{G} = G + \Delta_G \tag{7}$$

where our plant model $G(s)$ is now accompanied by additive uncertainty $\Delta_G \in \mathcal{RH}_\infty$. It is well known from the robust control literature [17] that disregard for uncertainty may have serious consequences for the true closed-loop system, and control loops which behave acceptably for the nominal plant may suffer dramatic stability and performance losses when applied to the true, uncertain plant. Recent results in the AW literature [20, 4, 23] seem to suggest that obtaining robust performance in the face of saturation may be more demanding.

Although there are several ways of representing uncertainty, the additive type given in equation (7) is appealing because it captures both output-multiplicative and input-multiplicative uncertanties: $\Delta_G = \Delta_o G$ or $\Delta_G = G\Delta_i$ where Δ_o and Δ_i are output and input multiplicative uncertainties respectively. The converse is only true if G^{-1} exists. As we are seeking global results it is necessary that $\Delta_G \in \mathcal{RH}_\infty$

A key feature of the standard AW formulation, is that it allows the decoupling of nominal linear behaviour from saturated behaviour. The presence of uncertainty destroys this property and, instead, uncertainty-dependent coupling is introduced, as illustrated in Figure 4. The block $\Delta_G M$ couples the "*linear loop*" with the output of the *nonlinear loop*. Although it is obvious that sufficiently small $\Delta_G(s)$ will not be problematic, for larger uncertainties potential stability issues may arise. Also note that if the map from u_{lin} to $\tilde{u}$ is sufficiently small, similar robustness properties to the linear system can be expected.

Following [23], robustness is tackled via a small gain approach. The following formal assumption is made:

Assumption 1 *The closed-loop linear system is robustly stable:* $\|K(I - GK)^{-1}\|_\infty = \beta$ *and* $\Delta_G \in \mathbf{\Delta}$ *where*

$$\mathbf{\Delta} = \left\{ \Delta \in \mathcal{RH}_\infty : \|\Delta\|_\infty < \frac{1}{\beta} \right\} \tag{8}$$

This assumption guarantees that, in the absence of saturation, the linear system satisfies the small gain condition for stability.

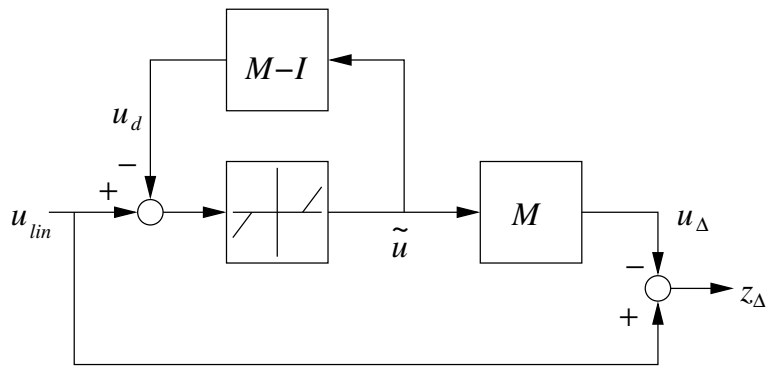

Figure 5: Robust stability minimisation problem

From Figure 4, note that

$$y_{lin} = Gu_{lin} + \Delta_G[u_{lin} - M\mathcal{F}(u_{lin})] = Gu_{lin} + \tilde{\Delta}_G(u_{lin}) \tag{9}$$

where $\mathcal{F}(u_{lin})$ denotes the nonlinear operator from u_{lin} to $\tilde{u}$ and $\tilde{\Delta}_G$ is the "modified" uncertainty representing the effect of saturation on the uncertainty. From the small gain theorem we know that robust stability is obtained if

$$\|\tilde{\Delta}_G\|_{i,2} = \|\Delta_G[I - M\mathcal{F}(.)]\|_{i,2} < \frac{1}{\beta} \tag{10}$$

Furthermore the level of robust stability will be equal to or better than that of the linear system if

$$\|\mathcal{T}_r\|_{i,2} = \|I - M\mathcal{F}(.)\|_{i,2} \leq 1 \tag{11}$$

It was shown in [23] (see also [24]) that as the nonlinear operator $\mathcal{F}(u_{lin}) = 0$ for sufficiently small u_{lin}, the $\mathcal{L}_2$ gain of $\mathcal{T}_r$ can never be less than unity. Thus nominal robustness is obtained when $\|\mathcal{T}_r\|_{i,2} = 1$ and hence $\|\tilde{\Delta}\|_{i,2} = \|\Delta\|_\infty$. Denoting the output of the M block as z_Δ it then follows that for robust stability of our anti-windup system we should attempt to minimise the $\mathcal{L}_2$ norm of $\mathcal{T}_r : u_{lin} \mapsto z_\Delta$ (as shown in Figure 5). This motivates the following problem formulation.

Problem 2 *The anti-windup compensator (6) is said to solve the* robust *anti-windup compensator problem with robustness margin $1/\mu$ if the closed-loop in Figure 4 is well-posed and the following hold:*

1. *If $\mathrm{sat}(u) \equiv u$, then the system is robustly stable for all $\Delta \in \mathbf{\Delta}$.*
2. *If $\Delta_G = 0$, then $M(s)$ solves strongly the standard anti-windup problem (Definition 2) for some performance level γ.*
3. *The operator $\mathcal{T}_r : u_{lin} \mapsto z_\Delta$ has finite $\mathcal{L}_2$ gain, i.e. $\|\mathcal{T}_r\|_{i,2} < \mu$.*

This problem will be addressed in the second part of the paper.

Remark 1: Obviously if $\mu = 1$, we have retained the robustness of the linear system. However, this is not always possible if the performance level, γ, is to be minimised as well, and thus it might be appropriate to relax our robustness requirements in order to obtain performance improvement. □

3 Standard AW Problem Solution ($\Delta_G = 0$)

The problem of stability and performance is addressed by minimizing the $\mathcal{L}_2$ gain of $\mathcal{T}_p : u_{lin} \mapsto y_d$, or alternatively finding the minimum $\gamma > 0$ such that $\|\mathcal{T}_p\|_{i,2} \leq \gamma$. The following procedure not only allows the synthesis of an optimal compensator, but also ensures asymptotic stability and gives a measure of global performance if the plant G is assumed asymptotically stable. The main result of the section is the following theorem.

Theorem 1 *There exists a full order anti-windup compensator $\Theta = [\Theta_1' \quad \Theta_2']' \in \mathcal{R}^{(m+q)\times m}$, as described by equation (6), which solves Problem 1 if there exist matrices $P = P' > 0$, $W = \mathrm{diag}(\omega_1, \ldots, \omega_m) > 0$ and a postive real scalar γ such that the following Riccati equation is satisfied*

$$\tilde{A}'P + P\tilde{A} + PBR^{-1}B'P + \tilde{Q} = 0 \tag{12}$$

where

$$\begin{aligned} \tilde{A} &= A + BR^{-1}D'C & (13)\\ \tilde{Q} &= C'(I + DR^{-1}D')C & (14)\\ R &= (\gamma^2 I - D'D) > 0 & (15) \end{aligned}$$

and

$$Z = (2W - D'D - \gamma^{-2}W^2) > 0 \tag{16}$$

Furthermore, if equation (12) and inequality (16) are satisfied, a suitable Θ achieving $\|\mathcal{T}_p\|_{i,2} < \gamma$ is obtained by calculating the matrix gain F in (6) as follows:

$$F = -\gamma^2(W^{-1} - \gamma^{-2})R^{-1}(B'P + D'C) \tag{17}$$

To aid our proof we will need the following property:

Definition 2 *Completing the square Given vectors $x \in \mathbb{R}^n, y \in \mathbb{R}^m$, matrices $X \in \mathbb{R}^{n\times p}, Y \in \mathbb{R}^{p\times m}$ and scalar α*

$$(\alpha Xx - \alpha^{-1}Yy)'(\alpha Xx - \alpha^{-1}Yy) = \alpha^2 x'X'Xx + \alpha^{-2}y'Y'Yy - x'X'Yy - y'Y'Xx$$

Proof: In order to solve strongly the AW compensation problem, it is necessary to meet the conditions stated in Problem 1. It is easy to observe that the first two conditions are trivially met if internal stability of the closed-loop compensated system is guaranteed, assuming zero initial conditions for the AW compensator. As will be shown later, by choosing F as described in Theorem 1, it is possible to guarantee that $\|\mathcal{T}_p\|_{i,2} < \gamma$ for any $\gamma > \|G\|_\infty$, therefore solving strongly the AW compensation problem.

For algebraic simplicity, we consider the case where $D = 0$ (the proof when $D \neq 0$ involves much more algebra and hence for space reasons is omitted). Note that as $Dz(.) \in \mathrm{Sector}[0, \mathrm{I}]$, it follows that for some matrix $W = \mathrm{diag}(\omega_1, \ldots, \omega_m) > 0$

$$\tilde{u}'W(u - \tilde{u}) \geq 0 \tag{18}$$

Next assume $\exists\, v(x) = x'Px > 0$, then if

$$L(x, u_{lin}, \tilde{u}, F, W) \quad := \quad \frac{d}{dt}x'Px + \|y_d\|^2 - \gamma^2\|u_{lin}\|^2 + 2\tilde{u}'W(u - \tilde{u}) \tag{19}$$

is negative definite, it follows that $\dot{v}(x) < 0$ is a Lyapunov inequality and the closed loop system is stable. Also notice that if $L(x, u_{lin}, \tilde{u}, F, W) < 0$, then assuming zero initial conditions, integrating $L(.)$ in the time interval from 0 to T and taking the limit $T \to \infty$, yields $\|y_d\|_2 < \gamma\|u_{lin}\|_2$ and hence $\|\mathcal{T}_p\|_{i,2} < \gamma$. Thus, if equation (19) is negative definite, the strong anti-windup problem is solved in the $\mathcal{L}_2$ sense.

Expanding (19) and substituting $u = u_{lin} - u_d$ gives

$$L = x'C'Cx - \gamma^2 u'_{lin}u_{lin} + \dot{x}'Px + x'P\dot{x} - 2\tilde{u}'Wu_d - 2\tilde{u}'W\tilde{u} + 2\tilde{u}'Wu_{lin} \tag{20}$$

This inequality contains several cross-terms in $x, \tilde{u}, u_{lin}$. We now eliminate the cross-product terms in three steps using Definition 2.

(I) The cross-product terms involving u_{lin} and $\tilde{u}$ can be grouped as follows:

$$-\left[\gamma^2 u'_{lin}u_{lin} - 2\tilde{u}'Wu_{lin}\right] = -\|\gamma u_{lin} - \gamma^{-1}W\tilde{u}\|^2 + \gamma^{-2}\tilde{u}'W^2\tilde{u}$$

Combining the above with (20), a cost function containing no cross-product terms between u_{lin} and $\tilde{u}$ is obtained. Using equation (1) to expand $\dot{x}$ and noticing from equation (6) that $u_d = Fx$:

$$L = x'(C'C + A'P + PA + 2PBF)x + 2\tilde{u}'(B'P - WF)x - \tilde{u}'(2W - \gamma^{-2}W^2)\tilde{u} - \|\gamma u_{lin} - \gamma^{-1}W\tilde{u}\|^2$$

(II) The cross-product terms involving $\tilde{u}$ and x can be grouped, including the extra term $\gamma^{-2}\tilde{u}'W^2\tilde{u}$ from **(I)**, as follows:

$$\begin{gathered} -\left[\tilde{u}'(2W - \gamma^{-2}W^2)\tilde{u} - 2\tilde{u}'(B'P - WF)x\right] = \\ -\|Z^{\frac{1}{2}}\tilde{u} - Z^{-\frac{1}{2}}(B'P - WF)x)\|^2 + x'(B'P - WF)'Z^{-1}(B'P - WF)x \end{gathered}$$

Note that $Z = (2W - \gamma^{-2}W^2)$ must be positive definite in order to have a well-posed problem, and hence the condition in equation (16) is imposed. This condition arises from the necessity of making the term

$$\|Z^{\frac{1}{2}}\tilde{u} - Z^{-\frac{1}{2}}(B'P - WF)x\|^2 \tag{21}$$

positive definite for any pair ($\tilde{u}$, x). It can easily be shown that if $Z \leq 0$, this is not always guaranteed. By replacing this new group of terms, the cost function can be written with no cross-product terms between $\tilde{u}$ and x:

$$\begin{gathered} L = x'(C'C + A'P + PA + 2F'B'P + PBZ^{-1}B'P - 2PBZ^{-1}WF + F'WZ^{-1}WF)x \\ -\|Z^{\frac{1}{2}}\tilde{u} - Z^{-\frac{1}{2}}(B'P - WF)x\|^2 - \|\gamma u_{lin} - \gamma^{-1}W\tilde{u}\|^2 \leq 0 \end{gathered}$$

(III) The terms involving F and $F'F$ can be grouped as follows:

$$\begin{gathered} F'WZ^{-1}WF - 2F'((WZ^{-1}B'P - B'P) = \\ \|Z^{-\frac{1}{2}}WF - Z^{\frac{1}{2}}W^{-1}(WZ^{-1} - I)B'P\|^2 - PB(WZ^{-1} - I)'W^{-1}ZW^{-1}(WZ^{-1} - I)B'P \end{gathered}$$

This last step will yield an expression for the matrix gain F. Finally, by using the results given in (**III**) we obtain an expression for our cost function (19) as

$$L(x, u_{lin}, \tilde{u}, F, W) = L_a + L_b + L_c \tag{22}$$

where

$$\begin{aligned} L_a &= x'(C'C + A'P + PA + PBZ^{-1}B'P - PB(WZ^{-1} - I)'W^{-1}ZW^{-1}(WZ^{-1} - I)B'P)x & (23)\\ L_b &= \|(Z^{-\frac{1}{2}}WF - Z^{\frac{1}{2}}W^{-1}(WZ^{-1} - I)B'P)x\|^2 & (24)\\ L_c &= -\|Z^{\frac{1}{2}}\tilde{u} - Z^{-\frac{1}{2}}(B'P - WF)x\|^2 - \|(\gamma u_{lin} - \gamma^{-1}W\tilde{u}\|^2 & (25) \end{aligned}$$

Equation (22) is comprised of three terms. The last term, L_c, is a negative definite quadratic term, and therefore if the first two terms can be set to zero, then $L(.) < 0$. Setting the second term, L_b, to zero yields a condition for the gain matrix F.

$$(Z^{-\frac{1}{2}}WF - Z^{\frac{1}{2}}W^{-1}(WZ^{-1} - I)B'P) = 0 \quad \Leftrightarrow \quad F = (\gamma^{-2} - W^{-1})B'P \tag{26}$$

where $P = P' > 0$ comes from solving the Ricatti equation which makes the first term $L_a = 0$:

$$C'C + A'P + PA + PBZ^{-1}B'P - PB(WZ^{-1} - I)'W^{-1}ZW^{-1}(WZ^{-1} - I)B'P = 0 \tag{27}$$

which, after some algebraic manipulation, reduces to:

$$C'C + A'P + PA + \gamma^{-2}PBB'P = 0 \tag{28}$$

These are exactly the conditions given in Theorem 1 with $D = 0$. Internal stability guarantees that condition (1) of the anti-windup problem (Problem 1) is satisfied; the finite $\mathcal{L}_2$ gain of $\mathcal{T}_p$ ensures condition (3) is satisfied, and hence condition (2) is also satisfied. Well-posedness of the loop is guaranteed by the lack of direct feedthrough terms i.e. $M - I$ is strictly proper. □□

Remark 2: Notice that the Riccati equation given is of bounded-real type and only has a solution if $G(s)$ is stable and $\gamma > 0$ is such that $\|G\|_\infty = \gamma_{opt} \leq \gamma$. That is, the performance level of the AW compensator is restricted by the $\mathcal{H}_\infty$ norm of the open-loop plant. This suggests that optimal anti-windup performance is obtained when $\gamma = \gamma_{opt}$, leaving the designer the task of choosing $W > 0$. This freedom in choosing W is absent in [23] and [11] and hence we have recovered freedom in choosing the so-called stability multiplier. □

Remark 3: The poles of AW compensator (6) are the poles of $M(s)$, which are the eigenvalues of the matrix $A + BF$ where F is given by equation (17). Note that equation (17) contains the "free" parameter, $W > 0$ which exerts influence over the location of the AW compensator poles. Thus it can be observed that, providing (A, B) is controllable (it is always stabilisable by virtue of A being Hurwitz), decreasing the size of W will tend to increase the magnitude of the AW compensator's poles. This extra freedom in shaping the AW compensator's poles is useful for discrete-time implementation when careful attention should be paid to their size relative to the sampling rate. In the LMI formulation of [23], W did not appear as a free parameter and hence there was not such direct control over pole magnitude. Note also that the freedom in choosing W allows one to "transfer" anti-windup action between the compensation signals u_d and y_d. □

Remark 4: Apart from being diagonal and positive definite, the only restriction on W is given by equation (16). When $D = 0$ this simply reduces to $(2I - \gamma^2 W) > 0$ which always holds for small enough $W > 0$. When $D \neq 0$, the condition on R ensures that $D'D < \gamma^2 I$ which in turn means that inequality (16) becomes

$$Z = 2W - \gamma^2 I - \gamma^{-2}W^2 > 0 \tag{29}$$

Using the Schur complement this holds if

$$\begin{bmatrix} 2W & W & I \\ W & \gamma^2 & 0 \\ I & 0 & \gamma^{-2} \end{bmatrix} > 0 \tag{30}$$

from which W can be determined. In the work carried out so far, it has been straightforward to choose W such that the condition on Z is satisfied. □

4 Robust anti-windup synthesis

4.1 Robustness analysis

Similar to the standard anti-windup problem above, the robust anti-windup problem, eventually reduces to the choice of a coprime factorisation of $G(s)$ and hence the choice of a matrix F (with the restriction that $(A+BF)$ is Hurwitz) . From the discussion in Section 2.2 we know that in order to achieve good robustness we need to minimise $\|\mathcal{T}_r\|_{i,2}$, which is the map from u_{lin} to z_Δ. Before the problem is solved formally, it is useful to examine the problem from a less rigorous perspective and to anticipate the solutions we might expect.

Following similar arguments to those in Section 3, to guarantee that $\|\mathcal{T}_r\|_{i,2} < \mu$, we consider

$$L(x, u_{lin}, \tilde{u}, F, W) \quad := \quad \frac{d}{dt}x'Px + \|z_\Delta\|^2 - \mu^2\|u_{lin}\|^2 + 2\tilde{u}'W(u-\tilde{u}) \tag{31}$$

If $L(.) < 0$ it follows that the anti-windup system is internally stable and that $\|\mathcal{T}_r\|_{i,2} < \mu$ indeed holds.

For the sake of illustration, let $W = I$. Although this restricts the design freedom, it enables the simple illustration of a class of robust AW compensators (the case when $W \neq I$ will be discussed next). Expanding (31) and substituting $u = u_{lin} - Fx$ and $z_\Delta = (u_{lin} - Fx - \tilde{u})$ gives

$$L = x'(A'P + PA + 2PBF + F'F)x + 2xPB\tilde{u} - \tilde{u}'\tilde{u} - (\mu^2 - 1)u'_{lin}u_{lin} - 2xF'u'_{lin} \tag{32}$$

Eliminating the cross-product terms in three steps, it is possible to obtain conditions which ensure global stability and some level of robustness robustness as

$$\tilde{A}'P + P\tilde{A} + \mu^{-2}PBB'P = 0 \tag{33}$$

and

$$Z = (1 - \mu^{-2})I > 0 \Leftrightarrow \mu > 1 \tag{34}$$

Furthermore, if equations (33) and (34) are satisfied, a suitable AW compensator achieving $\|\mathcal{T}_r\|_{i,2} < \mu$ is obtained by calculating the matrix gain F as follows:

$$F = -(1 - \mu^{-2})B'P \tag{35}$$

Notice that the immediately obvious solution for the Riccati equation in (33) is $P = 0$, which therfore implies that $F = 0$ and hence that our AW compensator takes the form of an internal-model-control (IMC) compensator. Thus for optimal robustness, the Riccati approach agrees with [23] in advocating the IMC scheme as an optimally robust solution as μ is not restricted by equation (33) if $P = 0$ (note from equation (34) that it is possible to

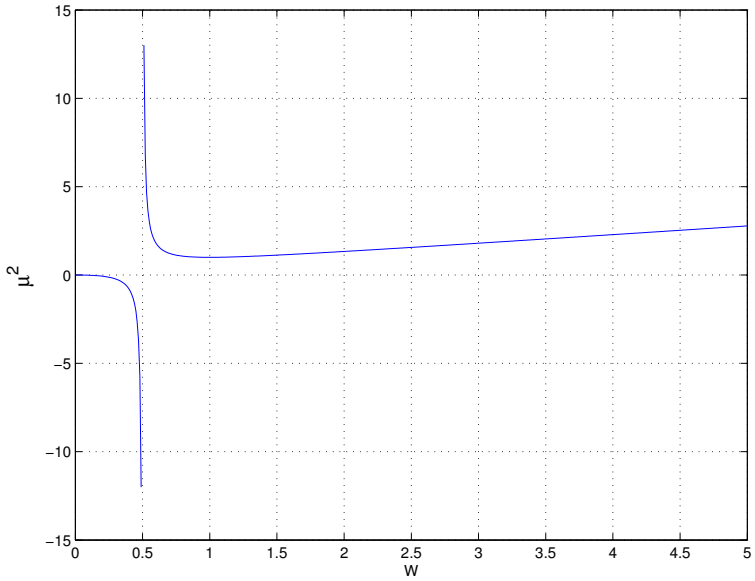

Figure 6: μ^2 and W such that $Z = 0$

achieve $\mu = 1$ for $P = 0$). However, there is more freedom in equation (33) because by defining $P =: \tilde{P}^{-1} > 0$ we could equivalently obtain, from equation (33), the Lyapunov equation

$$\tilde{P}A' + A\tilde{P} + \mu^{-2}BB' = 0 \tag{36}$$

which has a positive definite solution, and therefore produces a compensator different from the IMC scheme.

In order to solve the robust AW compensation problem, it is necessary to meet the conditions in Problem 2 (and hence Problem 1). It is easy to observe again that the conditions of the standard AW problem are met if internal stability of the closed-loop compensated system is guaranteed, assuming zero initial conditions for the AW compensator. By choosing F as described in (35), it is possible to guarantee that $\|\mathcal{T}_r\|_{i,2} < \mu$ for some $\mu > 0$, therefore solving the robust AW compensation problem. It can be argued that the the strong AW problem, i.e. $\|T_p\|_2 \leq \gamma$, is better solved when the IMC-like scheme is avoided (see Theorem 2 and proof).

Remark 5: It is not necessary to choose $W = I$. More generally, the expression for (31) is given as

$$\begin{aligned} L &= x'(A'P + PA + 2PBF + F'F)x + 2xPB\tilde{u} - \tilde{u}'(2W - I)\tilde{u} - (\mu^2 - 1)u'_{lin}u_{lin} - 2xF'u'_{lin} \\ &+ 2u_{lin}(W - I)\tilde{u}' - 2xF'(W - I)\tilde{u}' < 0 \end{aligned} \tag{37}$$

Completing the square for terms involving u_{lin}, a more general condition on Z is derived as

$$Z = 2W - \mu^{-2}W^2 - I > 0 \tag{38}$$

As W is diagonal, this implies that $\mu^2 > \frac{w_i}{2w_i - 1}$ $\forall i \in \{1 \ldots m\}$. This implies that $w_i > 0.5$ (since $\mu > 0$) and that the $\min_{w_i} \mu = 1$ and occurs at $w_i = 1$ (or $W = I$). Thus $W = I$ is in fact, the optimally robust solution. This can be seen in Figure 6. □.

4.2 Robust stability and performance analysis

The main purpose of AW compensation is to improve performance during periods of saturation. Section 2.2 mentioned that the solution to the robust AW problem with the greatest robustness margin (the smallest μ) is

likely to be IMC-like. In fact, just considering robustness leads to conditions (33) and (35) which do not give any explicit performance guarantees. The real value of conditions (33) and (35) is when used in conjuction with performance optimization.

The AW solutions given in [25] performed well but tended to produce large compensation signals and poles, which are often linked with poor robustness. Although robustness was present, it was not addressed formally. Later, [23] addressed robust stability and mixed robustness/perfromance optimization problems using LMI formulations. Nevertheless, this formulation lacks some intuition and practicability.

This section will attempt to show that the work in [18], which produces a family of anti-windup compensators, naturally yields a robust solution where the "stability multiplier" (i.e. W) is a measure of robustness. It will also give a method for the synthesis of robust AW compensators with performance guarantees.

The problem of robust stability and performance involves minimizing a mixed $\mathcal{L}_2$ gain. By combining the objective of robust stability with that of performance, it is possible to pose a sensible $\mathcal{L}_2$ gain optimization problem which addresses robustness and performance simultaneously.

Theorem 2 *Let Assumption 1 be satisfied, then there exists a full order robust anti-windup compensator* $\Theta = [\Theta_1' \quad \Theta_2']' \in \mathcal{R}^{(m+q)\times m}$*, as described by equation (6) which solves Problem 2 with robustness margin* $1/\mu$ *if there exist a matrix* $P = P' > 0$ *and postive real scalars* ω_p *and* γ *such that the following Riccati equation is satisfied*

$$\tilde{A}'P + P\tilde{A} + PBR^{-1}B'P + \tilde{Q} = 0 \tag{39}$$

where

$$\begin{aligned} \tilde{A} &= A + BR^{-1}D'C && (40)\\ \tilde{Q} &= C'(I + DR^{-1}D')C && (41)\\ R &= (\gamma^2 I - D'D) > 0 && (42) \end{aligned}$$

and

$$Z = (\omega_p - \gamma^{-2})(\omega_p^{-1}I - D'D) \quad > \quad 0 \tag{43}$$

Furthermore, if equation (39) is satisfied, a suitable Θ *is obtained by calculating the matrix gain* F *as:*

$$F = -\gamma^2 R^{-1}(\omega_p - \gamma^{-2})(B'P + D'C) \tag{44}$$

and the robustness margin is given as $1/\mu = 1/\gamma\sqrt{\omega_p}$.

Before we give a formal proof of this theorem, it is instructive to consider the relationship between the standard AW solution and robustness. For simplicity assume $G(s)$ is strictly proper ($D = 0$), then it follows that for simultaneous performance and robustness optimisation we would like to ensure

$$\left\| \begin{array}{c} W_p^{\frac{1}{2}} y_d \\ z_\Delta \end{array} \right\|_2 \leq \mu \|u_{lin}\|_2 \tag{45}$$

where $W_p > 0$ is a matrix which weights the performance variable, y_d, to allow a trade-off between performance and robustness. From the results given in section 4.1, a sufficient condition for this to hold can be easily derived and is given by

$$A'P + PA + \mu^{-2}PBB'P + C'W_pC = 0 \tag{46}$$

$$F = -(\hat{W}^{-1} - \mu^{-2})B'P \tag{47}$$

where $\hat{W}$ is the extra parameter introduced by the Circle Criterion formulation and the sector bound definition. Next assume that $W_p = I\omega_p > 0$, then defining $P_w := P\omega_p^{-1} > 0$ allows us to write equation (46) as

$$\omega_p(A'P_w + P_wA + \mu^{-2}\omega_p P_w BB'P_w + C'C) = 0 \tag{48}$$

Next, defining $\gamma := \mu/\sqrt{\omega_p}$ yields (as $\omega_p > 0$)

$$A'P_w + P_wA + \gamma^{-2}P_wBB'P_w + C'C = 0 \tag{49}$$

Similarly we obtain F as

$$F = -(\hat{W}^{-1} - \mu^{-2})B'P_w\omega_p = -(\hat{W}^{-1}\omega_p - \gamma^{-2})B'P_w \tag{50}$$

Notice that equations (49) and (50) are of exactly the same form as (12) and (17) with P_w playing the role of P and $\hat{W}^{-1}\omega_p = W^{-1}$.

$$\mu = \gamma\sqrt{\omega_p} \leq \gamma\|\sqrt{W\hat{W}^{-1}}\| \tag{51}$$

Thus for small ω_p, or equivalently large W we have greater robustness (as small μ corresponds to greater robustness margin, $\frac{1}{\mu}$). Thus in the standard AW problem, the choice of W is directly linked to the robustness of the system and must be chosen large to increase robustness.

Proof of Theorem 2: To satisfy the robustness and performance AW problem we need to ensure that both the standard AW problem, i.e. $\|\mathcal{T}_p\|_{i,2} < \gamma$ for some $\gamma > 0$, and the robust AW problem, i.e. $\|\mathcal{T}_r\|_{i,2} < \mu$ for some $\mu > 0$, are satisfied while also requiring internal stability and well-posedness. In order to achieve this we would like to ensure that

$$\left\| \begin{matrix} \sqrt{\omega_p}y_d \\ z_\Delta \end{matrix} \right\|_{i,2} \leq \mu\|u_{lin}\|_2 \tag{52}$$

If this inequality is satisfied it ensures that both $\|\mathcal{T}_r\|_{i,2} < \mu$ and $\|\mathcal{T}_p\|_{i,2} < \gamma = \frac{\mu}{\sqrt{\omega_p}}$. To guarantee inequality (52) holds and to ensure internal stability, as before, it suffices that

$$L(x, u_{lin}, \tilde{u}, F, W) \quad := \quad \frac{d}{dt}x'Px + \omega_p y_d'y_d + z'z - \mu^2 u_{lin}'u_{lin} + 2\tilde{u}'W(u - \tilde{u}) < 0 \tag{53}$$

The remainder of the proof is given for the general case when $D \neq 0$. Although it is possible to give a simpler proof when $D = 0$, the simplicity obscures the cross terms which require more care in removing.

First note that we can "absorb" ω_p into the plant's C and D matrices:

$$\|\sqrt{\omega_p}y_d\|^2 = \|\sqrt{\omega_p}[(C + DF)x + D\tilde{u}]\|^2 = \|(C_w + D_wF)x + D_w\tilde{u}\|^2$$

where $C_w = \sqrt{\omega_p}C$ and $D_w = \sqrt{\omega_p}D$.

Expanding (53) and substituting $u = u_{lin} - u_d$ and $y_d = (C_w + D_wF)x + D_w\tilde{u}$ gives:

$$\begin{aligned} L \quad = \quad & \dot{x}'Px + x'P\dot{x} + x'(C_w + D_wF)'(C_w + D_wF)x + x'F'Fx - (\mu^2 - 1)u_{lin}'u_{lin} - \tilde{u}'(2W - I - D_w'D_w)\tilde{u} \\ & -2x'F'u_{lin} + 2\tilde{u}(W - I)u_{lin} - 2x'F'(W - I)\tilde{u} + 2x'(C_w + D_wF)'D_w\tilde{u} \end{aligned} \tag{54}$$

As before, the cross-product terms are eliminated in three steps.

(I) The cross-product terms involving u_{lin}, $\tilde{u}$ and x are grouped as follows:

$$-\left[(\mu^2-1)u'_{lin}u_{lin}+2x'F'u_{lin}-2\tilde{u}(W-I)u_{lin}\right]=$$
$$-\|(\mu^2-1)^{\frac{1}{2}}u_{lin}-(\mu^2-1)^{-\frac{1}{2}}((W-I)\tilde{u}-Fx)\|^2+(\tilde{u}'(W-I)-x'F)(\mu^2-1)^{-1}((W-I)\tilde{u}-Fx)$$

Combining the above and equation (54), a cost function containing no cross-product terms between u_{lin}, $\tilde{u}$ and x is obtained:

$$\begin{aligned} L &= x'(A'P+PA+2PBF+(C_w+D_wF)'(C_w+D_wF)+\tilde{\mu}F'F)x-\tilde{u}'\tilde{\mu}Z\tilde{u}+2x'(C_w+D_wF)'D_w\tilde{u} \\ &+ 2x'PB\tilde{u}-2x'F'\tilde{\mu}(W-I)\tilde{u}-\|(\mu^2-1)^{\frac{1}{2}}u_{lin}+(\mu^2-1)^{-\frac{1}{2}}((W-I)\tilde{u}-Fx)\|^2 \end{aligned} \tag{55}$$

where $Z=2W-W^2\mu^{-2}-I-\tilde{\mu}^{-1}D'_wD_w$* and $\tilde{\mu}=1-(\mu^2-1)^{-1}=\frac{\mu^2}{\mu^2-1}$
(II) The cross-product terms involving $\tilde{u}$ and x are grouped as follows:

$$-\left[\tilde{u}'\tilde{\mu}Z\tilde{u}-2x'(PB+(C_w+D_wF)'D_w-F'\tilde{\mu}(W-I))\tilde{u}\right]=$$
$$-\|\tilde{\mu}^{\frac{1}{2}}Z^{\frac{1}{2}}\tilde{u}-\tilde{\mu}^{-\frac{1}{2}}Z^{-\frac{1}{2}}(B'P+D'_w(C_w+D_wF)-\tilde{\mu}(W-I)F)x\|^2$$
$$+x'(PB+(C_w+D_wF)'D_w-F'\tilde{\mu}(W-I))\tilde{\mu}^{-1}Z^{-1}(B'P+D'_w(C_w+D_wF)-\tilde{\mu}(W-I)F)x$$

By replacing this group of terms, the cost function can be written with no cross-product terms between $\tilde{u}$ and x, viz:

$$\begin{aligned} L &= x'(A'P+PA+C'_w(I+D_w\tilde{\mu}^{-1}Z^{-1}D'_w)C_w+2C'_wD_w\tilde{\mu}^{-1}Z^{-1}B'P+PB\tilde{\mu}^{-1}Z^{-1}B'P \\ &+ F'(\tilde{\mu}+\tilde{\mu}(W-I)Z^{-1}(W-I)+D'_w(I+D_w\tilde{\mu}^{-1}Z^{-1}D'_w)D_w-2D'_wD_wZ^{-1}(W-I))F \\ &+ 2PB(I+\tilde{\mu}^{-1}Z^{-1}D'_wD_w-Z^{-1}(W-I))F+2C'_wD_w(I+D_w\tilde{\mu}^{-1}Z^{-1}D'_w-Z^{-1}(W-I))F)x \\ &- \|(\mu^2-1)^{\frac{1}{2}}u_{lin}+(\mu^2-1)^{-\frac{1}{2}}((W-I)\tilde{u}-Fx)\|^2 \\ &- \|Z^{\frac{1}{2}}\tilde{u}-Z^{-\frac{1}{2}}(B'P+D'_w(C_w+D_wF)-\tilde{\mu}(W-I)F)x\|^2 \end{aligned} \tag{56}$$

(III) The terms involving F and $F'F$ are grouped.. Before grouping terms, it is possible to reduce them by using the definitions for $\tilde{\mu}$ and Z. Although some algebra is involved, it is easy to note that:

$$\begin{aligned} I+\tilde{\mu}^{-1}Z^{-1}D'_wD_w-Z^{-1}(W-I) &= Z^{-1}(W-W^2\mu^{-2}) \\ \tilde{\mu}+D'_wD_w+\tilde{\mu}(W-I)Z^{-1}(W-I)-2D'_wD_wZ^{-1}(W-I)+D'_wD_w\tilde{\mu}^{-1}Z^{-1}D'_wD_w &= \tilde{\mu}H \end{aligned}$$

where

$$H=W^2\mu^{-2}+(W-W^2\mu^{-2})Z^{-1}(W-W^2\mu^{-2})$$

The problem of grouping terms invloving F is now reduced to:

$$F'\tilde{\mu}HF+2F'(W-W^2\mu^{-2})Z^{-1}(B'P+D'_wC_w)=$$
$$\|\tilde{\mu}^{\frac{1}{2}}H^{\frac{1}{2}}F+\tilde{\mu}^{\frac{-1}{2}}H^{\frac{-1}{2}}(W-W^2\mu^{-2})(B'P+D'_wC_w)\|^2$$
$$-(PB+C'_wD_w)Z^{-1}(W-W^2\mu^{-2})\tilde{\mu}^{-1}H^{-1}(W-W^2\mu^{-2})Z^{-1}(B'P+D'_wC_w)$$

Using the matrix inversion lemma:

$$H^{-1}=W^{-2}\mu^2-W^{-2}\mu^2(W-W^2\mu^{-2})\tilde{\mu}R^{-1}(W-W^2\mu^{-2})W^{-2}\mu^2$$

*This reduces to the Z given in Theorem 2 when $W=I$ - see later in the proof.

where $R = \mu^2 I - D_w' D_w$. Now define the matrix Q as follows:

$$Q = Z^{-1}(W - W^2\mu^{-2})\tilde{\mu}^{-1}H^{-1}(W - W^2\mu^{-2})Z^{-1} = R^{-1}(W - W^2\mu^{-2})W^{-2}\mu^2(W - W^2\mu^{-2})Z^{-1}$$

such that the following equality holds:

$$\tilde{\mu}^{-1}Z^{-1} - Q = R^{-1}$$

Finally, by using the results given in **III** an expression for the cost function (53) is given by

$$L(x, u_{lin}, \tilde{u}, F, W) = L_a + L_b + L_c \tag{57}$$

where

$$\begin{aligned} L_a &= x'[A'P + PA + PB(\tilde{\mu}^{-1}Z^{-1} - Q)B'P + C_w'(I + D_w(\tilde{\mu}^{-1}Z^{-1} - Q)D_w')C_w \\ &+ 2C_w'D_w(\tilde{\mu}^{-1}Z^{-1} - Q)B'P]x \qquad (58) \\ L_b &= x'(\|\tilde{\mu}^{\frac{1}{2}}H^{\frac{1}{2}}F + \tilde{\mu}^{\frac{-1}{2}}H^{\frac{-1}{2}}(W - W^2\mu^{-2})Z^{-1}(B'P + D_w'C_w)\|^2)x \qquad (59) \\ L_c &= -\|(\mu^2 - 1)^{\frac{1}{2}}u_{lin} + (\mu^2 - 1)^{\frac{-1}{2}}((w - I)\tilde{u} - Fx)\|^2 \\ &\quad -\|Z^{\frac{1}{2}}\tilde{u} - Z^{\frac{-1}{2}}(B'P + D_w'(C_w + D_wF) - \tilde{\mu}(W - I)F)x\|^2 \qquad (60) \end{aligned}$$

As before the negative quadratic terms can be ignored and the second term, L_b, set to zero in order to obtain a stabilizing matrix gain F.

$$\tilde{\mu}^{\frac{1}{2}}H^{\frac{1}{2}}F + \tilde{\mu}^{\frac{-1}{2}}H^{\frac{-1}{2}}(W - W^2\mu^{-2})Z^{-1}(B'P + D_w'C_w) \tag{61}$$

$$F = -\tilde{\mu}^{-1}H^{-1}(W - W^2\mu^{-2})(B'P + D_w'C_w)$$

which after some simplifications yields:

$$F = -\mu^2(W^{-1} - \mu^{-2})R^{-1}(B'P + D_w'C_w) \tag{62}$$

where $P = P' > 0$ comes from solving the Ricatti equation which makes the first term $L_a = 0$, viz:

$$A'P + PA + C_w'D_wR^{-1}B'P + PBR^{-1}D_w'C_w + PBR^{-1}B'P + C_w'(I + D_wR^{-1}D_w')C_w \tag{63}$$

Subsituting for C_w and D_w transforms equation (62) into

$$\begin{aligned} F &= -\mu^2\omega_p^{-1}(W^{-1}\omega_p - \mu^{-2}\omega_p)(\mu^2\omega_p^{-1}I - D'D)^{-1}(B'P_w^{-1} + D'C) \qquad (64) \\ &= \gamma^2(W^{-1}\omega_p - \gamma^{-2}I)(\gamma^2 I - D'D)(B'P_w + D'C) \qquad (65) \end{aligned}$$

where $\gamma = \mu\sqrt{\omega_p^{-1}}$. Redefining $R = (\gamma^2 I - D'D)$ and setting $W = I$ (as it is a free parameter) the expressions for F and Z given in Theorem 2 can be obtained. We can apply a similar strategy to equation (63) to obtain

$$A'P_w + P_wA + C'DR^{-1}B'P_w + P_wBR^{-1}D'C + P_wBR^{-1}B'P_w + C'(I + DR^{-1}D')C \tag{66}$$

where $P_w = P\omega_p^{-1}$ plays the role of P.

The proof is completed by noting that internal stability, which is guaranteed by choosing F as stipulated and the solution to the Riccati equation in (63), ensures conditions (1) and (3) (and hence condition (2)) of the standard anti-windup problem. This guarantees condition (1) of the robust anti-windup problem, while condition (3) is

satisfied through Assumption 1. Well-posedness of the system is trivially guaranteed by the absence of direct feedthourgh terms in the nonlinear loop. □□.

Remark 6: As $\mu = \gamma\sqrt{\omega_p}$ it follows that by choosing ω_p small, we have a better robustness margin and choosing ω_p large gives a worse robustness margin. Also, a small ω_p causes our feedback matrix F to become small and hence approach the IMC solution; a large ω_p creates large compensator poles. It is interesting to compare the conditions in Theorems 1 and 2. Note that W^{-1} in Theorem 1 is essentially equivalent to ω_p in Theorem 2. Therefore, choosing W in Theorem 1 large implies greater robust stability and choosing it small implies worse robust stability. Thus the choice of the "stability multplier", W, plays a central role in the robustness of the anti-windup compensator. Alternatively, in the standard AW solution, W can be seen as the "robustness weighting matrix": choosing W large (and therefore ω_p small) increases the robustness of the design. This gives some theoretical justification for the robustness of the schemes tested in [7]. □

Remark 7: It is not necessary to choose $W_p = \omega_p I$ in robust anti-windup synthesis. We have made this choice in Theorem 2 to enable clear expressions for robustness to be given, although this is not a requirement in general. With W_p chosen as a more general positive definite (normally diagonal) matrix, it is possible to increase the flexibility in the design and draw the same general conclusions, although the robustness margin will not be as explicit as that given in Theorem 2. □

Remark 8: The main difference between the solutions to the standard and robust AW problems are the conditions imposed on the solution by the different expressions for Z in inequalities (16) and (43). These inequalities impose different conditions on the free parameter, W or ω_p. They also give rise to different extreme solutions. This is perhaps most easily seen for $D = 0$. In this case inequalities (16) and (43) become

$$Z_{nom} := 2W - \gamma^{-2}W^2 \Rightarrow 2\gamma^2 I > W \tag{67}$$

$$Z_{rob} := (\omega_p - \gamma^{-2})\omega_p^{-1} \Rightarrow \gamma^2 > \omega_p^{-1} \tag{68}$$

So when W is as large as possible, that is $W \approx 2\gamma^2 I$, it follows that from equation (17) F is nonzero, and hence, not IMC-like. Conversely, when ω_p is as small as possible and $\omega_p^{-1} \approx \gamma^2$, it follows from equation (44) that $F \approx 0$ and hence, the IMC solution is recovered. Thus, as expected from the results of [23], the optimal robust AW scheme (i.e. when ω_p is as small as possible), results in the IMC scheme. It is also interesting to note that inequality (43) ensures that inequality (16) holds; the converse is only true if $\|D\|$ is "small". □

5 Example

In this section, the effectiveness of the results are shown through an example taken from the literature. This example, a missile auto-pilot introduced by [13], was also used in [25] and [14]. The plant is a simplified model of the dynamics of the roll-yaw channels of a bank-to-turn misile:

$$A_p = \begin{bmatrix} -0.818 & -0.999 & 0.349 \\ 80.29 & -0.579 & 0.009 \\ -2734 & 0.05621 & -2.10 \end{bmatrix},$$

$$B_p = \begin{bmatrix} 0.147 & 0.012 \\ -194.4 & 37.61 \\ -2716 & -1093 \end{bmatrix}, \quad B_{pd} = \begin{bmatrix} 0 & 0 \\ 0 & 0 \\ 0 & 0 \end{bmatrix}$$

$$C_p = \begin{bmatrix} 1 & 0 & 0 \\ 0 & 1 & 0 \end{bmatrix}, \quad D_p = D_{pd} = \begin{bmatrix} 0 & 0 \\ 0 & 0 \end{bmatrix}$$

A nominal linear LQG/LTR controller yields excellent nominal closed-loop time and frequency responses and is given by

$$\left[\begin{array}{c|c|c} A_c & B_c & B_{cr} \\ \hline C_c & D_c & D_{cr} \end{array}\right] = \left[\begin{array}{cc|c|c} A_{c1} & B_{c1} & 0 & 0 \\ 0 & 0 & -I & I \\ \hline C_{c1} & 0 & 0 & 0 \end{array}\right] \tag{69}$$

where

$$A_{c1} = \begin{bmatrix} -0.29 & -107.8 & 6.67 & -2.58 & -0.4 \\ 107.68 & -97.81 & 63.95 & -4.52 & -5.35 \\ -6.72 & 64.82 & -54.19 & -40.79 & 5.11 \\ 3.21 & 2.1 & 29.56 & -631.15 & 429.89 \\ 0.36 & -3.39 & 3.09 & -460.03 & -0.74 \end{bmatrix},$$

$$B_{c1} = \begin{bmatrix} 2.28 & 0.48 \\ -40.75 & 2.13 \\ 18.47 & -0.22 \\ -2.07 & -44.68 \\ -0.98 & -1.18 \end{bmatrix}, \quad C_{c1} = \begin{bmatrix} 0.86 & 8.54 & -1.71 & 43.91 & 1.12 \\ 2.17 & 39.91 & -18.39 & -8.51 & 1.03 \end{bmatrix}$$

The actuators have saturation limits of ± 8 in both channels. Figure 7 shows the nominal linear response of the missile for a pulse reference $r = [\ 6 \quad -6\ ]$ applied for 16 seconds. Notice the excellent response and decoupling. However, observe that the control signal strays outside the set $\mathcal{U} = \{(8,8),(-8,8),(-8,-8),(8,-8)\}$for a considerable period of time. This suggests that the system with saturated actuators might have poor performance and could even become unstable. Figure 8 shows the system with saturation (but no AW); clearly the saturation has caused a loss in coupling and gives rise to large overshoots. To limit the degradation caused by saturation, an AW compensator designed using Theorem 1 is introduced. As the anti-windup compensator is designed using the bounded real Riccati equation associated with the open-loop system, the optimal value of γ is $\|G(s)\|_\infty = \gamma \approx 379$, leaving the designer the task of choosing W. Choosing W as $W = 10I_{2\times 2}$ yielded the following value of F:

$$F = \begin{bmatrix} 4.8324 & 31.0935 & 0.9470 \\ -0.1224 & -0.6860 & -0.0004 \end{bmatrix} \tag{70}$$

Figure 9 shows the missile response with the full order AW compensation proposed in Theorem 1. Notice the improvement over the uncompensated response: the saturated system follows the linear response closely and the return to nominal linear dynamics is swift. Also, observe how the control signal of the compensated system returns to linear behaviour faster than the uncompensated system. After saturation i.e. when $u - \mathrm{sat}(u) = 0$, the system displays additional dynamics introduced by the AW compensator. This suggests that the poles of the AW compensator must be fast and well damped.

Note that the Riccati based synthesis described in Theorem 1 gives, for a given value of γ (and therefore $P > 0$), a family of gains, F, and therefore anti-windup compensators, parameterised by the diagonal matrix $W > 0$. Observe from equation (6) that the poles of the anti-windup compensator and the sizes of the compensation signals y_d and u_d are functions of W. Increasing the size of F (and thus decreasing the size of W) leads to larger poles (faster dynamics) and a large compensation signal u_d. The flexibility in W is useful for implementation as it allows the designer to limit the magnitude of the compensator poles to ensure that they are compatible with the sampling frequency. The possibility of closely relating the size of the stability multiplier with the systems poles is not present in th LMI formulation of the problem. Figure 10 shows time simulations for different values of W with a fixed sampling rate of $10^{-3} sec$.

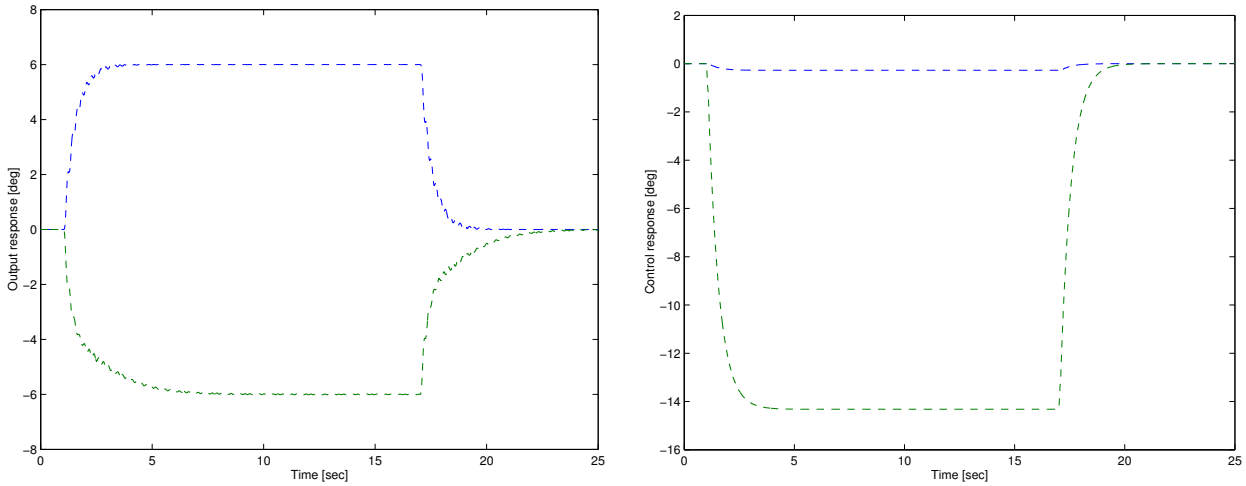

Figure 7: Nominal linear resposne

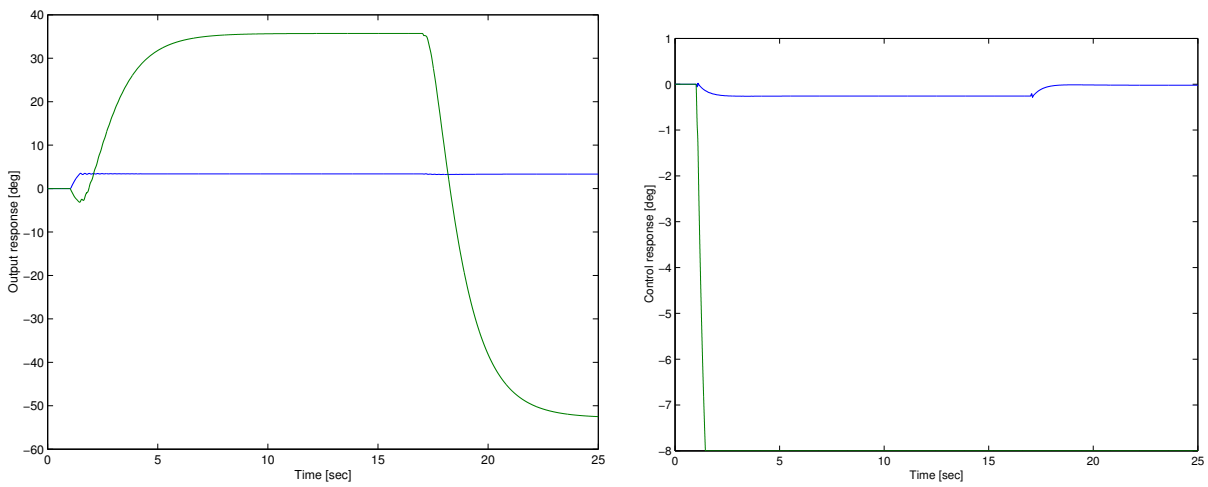

Figure 8: Saturated system with no AW compensation

Now consider the *real* nominal open-loop plant $\tilde{G}(s) = G(s)\Delta_{act}(s)$ consisting of the nominal plant $G(s)$ plus unmodelled dynamics $\Delta_{act}(s) = \mathrm{diag}(\delta_{act}(s), \delta_{act}(s))$ where $\Delta_{act}(s)$ represents unmodelled actuator dynamics of the form:

$$\delta_{act}(s) \quad = \quad \frac{\omega_n^2}{s^2 + 2\zeta\omega_n s + \omega_n^2}$$

where ω_n is the undamped natural frequency and ζ is the damping constant. Assuming a "worst case" scenario (from looking at the frequency response of the closed-loop transfer function) and setting these constants to $30 rad/sec$ and 0.049 respectively, the actuators have a resonant peak and very large phase shifts near the crossover frequency. This input-multiplicative uncertainty can be modelled as an additive uncertainty $\Delta_G(s) = G(s)[\Delta_{act}(s) - I]$. It can be verfied using the small gain theorem that under this uncertainty the system is robustly stable as $\|K(I - GK)^{-1}\Delta_G\|_\infty < 1$. The nominal (un-saturated) closed loop response, including uncertainties, is shown in Figure 11 and it is clear that stability has been maintained and that linear performance in the face of this uncertainty is remarkably good. However, introducing saturation as well as the uncertainty leads to the system entering a very high amplitude limit cycle (Figure 12).

In order to show the advantages of the Riccati based design method proposed in this paper, it will be compared

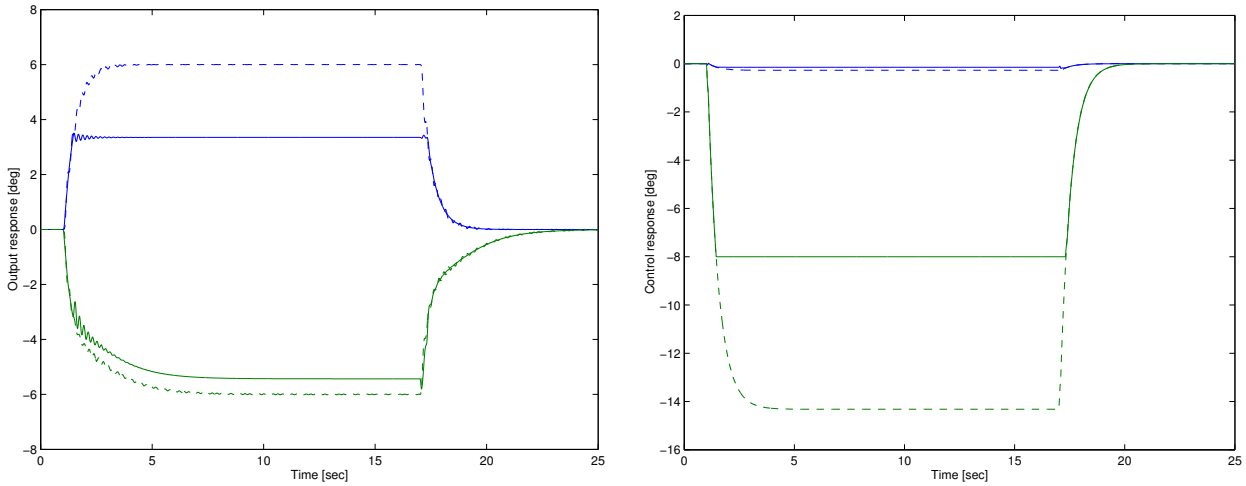

Figure 9: Saturated system with full-order AW compensation using Theorem 1

against the static, low-order and robust full-order LMI methods proposed in [23, 25, 23]. Consider the uncertain, saturated, AW compensated closed-loop system. Firstly, static and low-order compensators are designed using the LMI method described in [25], to give:

$$\Theta_{static} = \begin{bmatrix} \Theta_1 \\ \Theta_2 \end{bmatrix} = \begin{bmatrix} -0.9992 & -0.0039 \\ 0.0173 & -0.6921 \\ -0.0112 & -0.5573 \\ -0.2022 & -0.3408 \end{bmatrix}$$

$$\Theta_{loword} = F_1\Theta_1 + F_2\Theta_2 = F_1 \begin{bmatrix} -1.6973 & 5.1136 \\ 3.5044 & 81.5261 \end{bmatrix} + F_2 \begin{bmatrix} -7.2807 & -356.3648 \\ -113.6640 & 53.0146 \end{bmatrix}$$

where the low-pass filters are chosen to be $F_1 = \mathrm{diag}(\frac{2}{s+2}, 1)$ and $F_2 = I_2$

From Figures 13 and 14 it is evident that both the static and low-order compensators just manage to maintain stability in the presence of uncertainty, but the system's tracking and decoupling properties are lost. This reinforces the need for robust AW compensation schemes which can deal with a wide range of uncertainties in a systematic way. Using the approach of [23], a "robust" LMI based AW compensator was obtained by choosing weights $W_p = I$ (performance) and $W_r = 0.001I$ (robustness) to give the matrix gain:

$$F = \begin{bmatrix} 0.1181 & 0.8070 & 0.0240 \\ -0.0035 & -0.0172 & -0.0002 \end{bmatrix} \tag{71}$$

The robust full-order compensator synthesis of [23] will be compared against the synthesis method proposed in this paper. Figure 15 shows the response of the full-order LMI based AW compensator proposed in [23]. Surprisingly, its performance is worse than that of the static or low-order compensators. This may be due to the fact that in such a scheme, robustness is achieved by reducing the magnitude of the poles of the compensator. This, in turn, reduces the system's performance. Although this is the ever present trade-off in robust control, the lack of *real* freedom in the LMI synthesis method compromises more performance than necessary.

Figure 15 shows the response of the full-order Riccati based AW compenstor proposed in Theorem 2. Although the response is far from ideal, it is definitely stable and yields overshoots around two orders of magnitude lower than the LMI-based compensator. Although the robust Riccati-based compensator has faster dynamics, it is

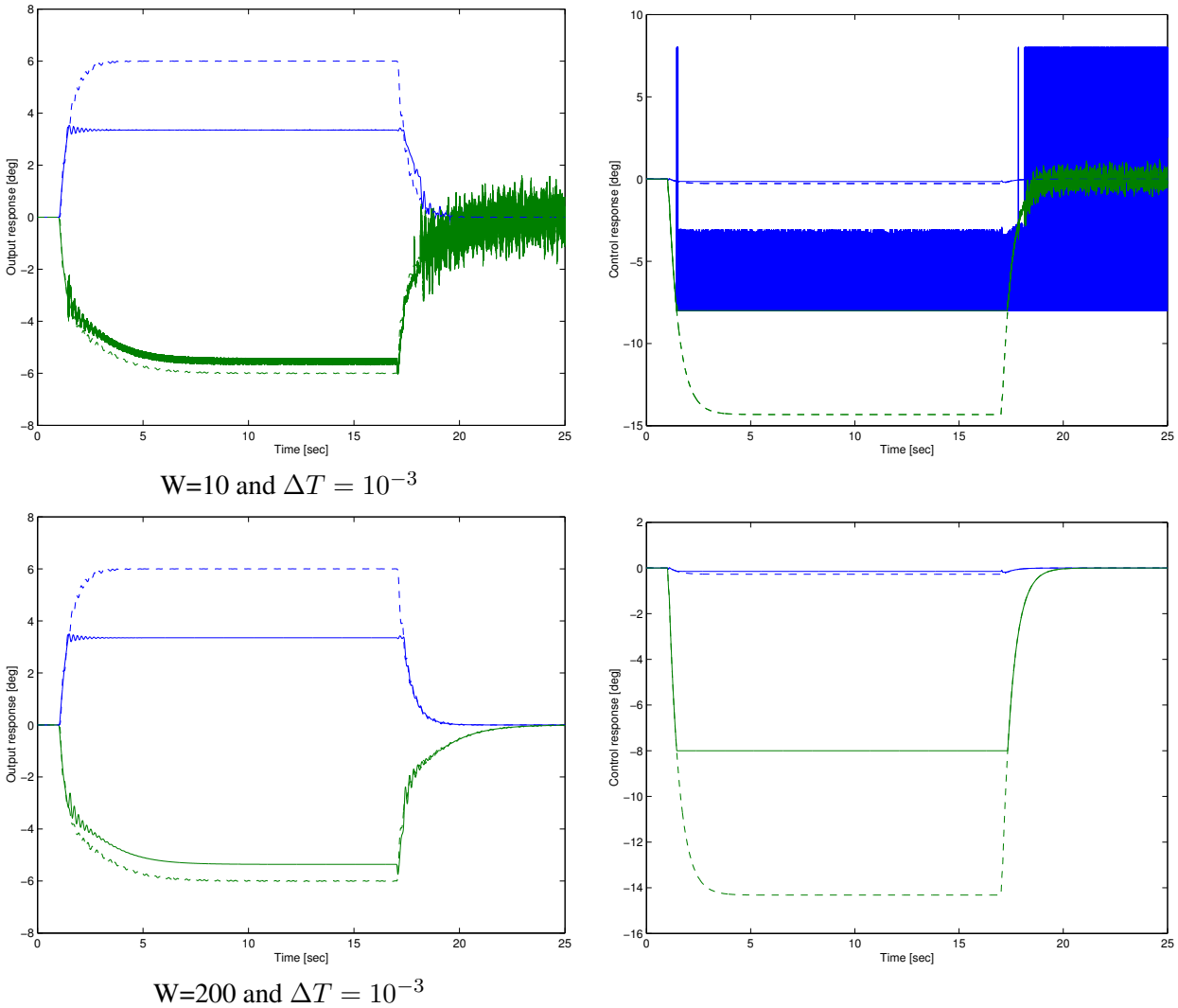

Figure 10: Full order compensation using Theorem 1 for different values of W, $\gamma = 378$ and a sampling rate of $10^{-3} sec$

clearly preferable to the LMI compensator. This is actually achieved by using Theorem 1, which can be seen as a weighted version of Theorem 2, and setting $W = diag[20, 0.1]$ and $\gamma = 500$. Notice that the freedom in choosing γ or W is especially useful and is almost absent in the LMI formulations. In other words, the so called stability multiplier (W) and the performance index γ capture in a more efficient way the trade-offs that exist between robustness and performance when designing AW cmpensators in the presence of uncetainties.

Remark 9: The example in this section has provided a simple illustration of the application of the algorithms developed in this paper. It has been demonstrated how the link between the free parameter W and the AW compensator's closed-loop poles is useful for practical situations. The other strength of the Riccati technique when compared to the LMI techniques is its numerical superiority. Although the robust design algorithm of Theorem 2 has an LMI counterpart given in [23, 24], for large and complex problems, LMI's can become unreliable and unwieldy. Unfortunately, a comprehensive discussion of such an example is beyond the scope of the current paper but AW compensators based on the Riccati techniques proposed here have recently been tested on a model of an experimental aircraft; these results are due to be reported in [19].

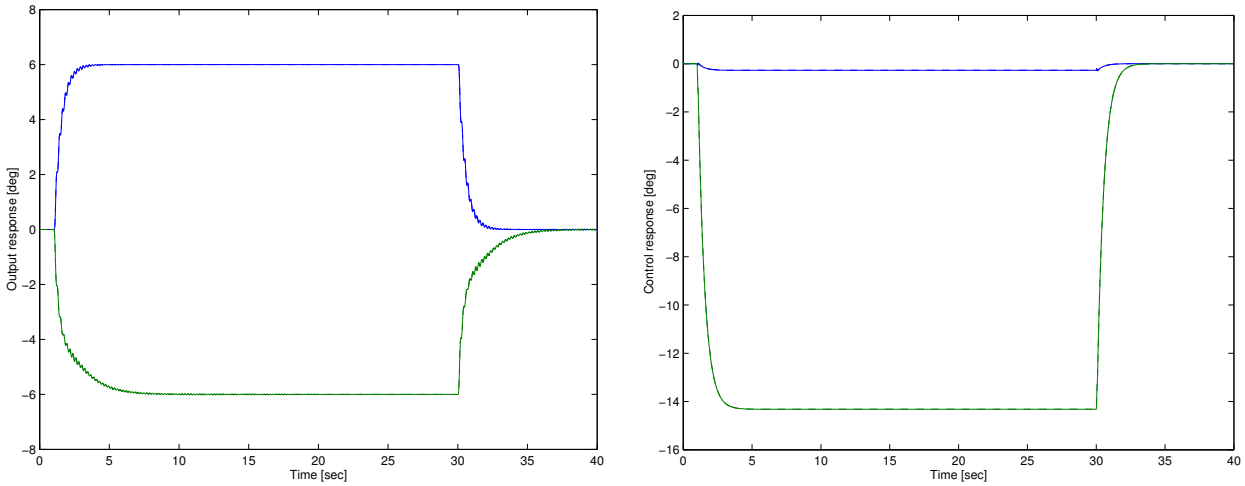

Figure 11: Uncertain Unsaturated system

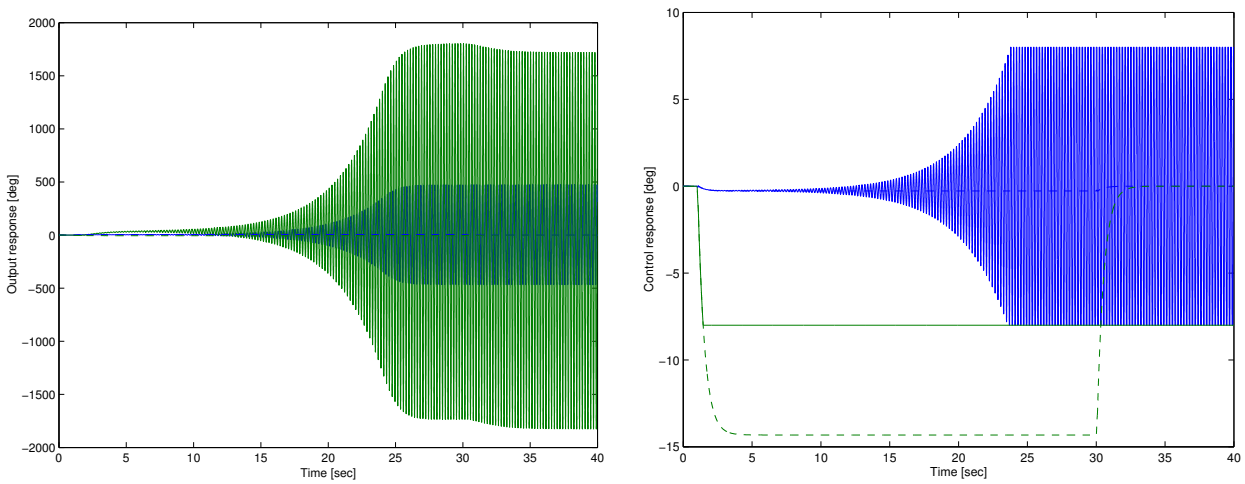

Figure 12: Uncertain Saturated system

6 Conclusions

This paper has presented an alternative solution to the full-order AW problem with performance and robustness guarantees. The solution given is novel in the sense that most other full-order AW design techniques which ensure stability and performance involve LMI's (see [6] for a general treatment): here we simply require the solution to a bounded real type of Riccati equation. The solution is also believed to be more intuitive in the way that the free parameter, $W > 0$, is clearly linked to the poles of the anti-windup compensator, which has important practical relevance.

The paper has also been successful in incorporating robustness into the AW problem and the results obtained have uncovered the close relationship that exists between robust stability and the free parameter W, or the "stability multiplier". An important feature of designing full-order compensators using Riccati equations is that freedom in choosing W allows the designer to reflect the relative importance of the input channels. Such is the case of the auto-pilot-missile example, where even though both channels have saturation limits, only the second tends to exceeds these limits.

Another important feature is the direct freedom the designer has in choosing γ. Although optimal peformance

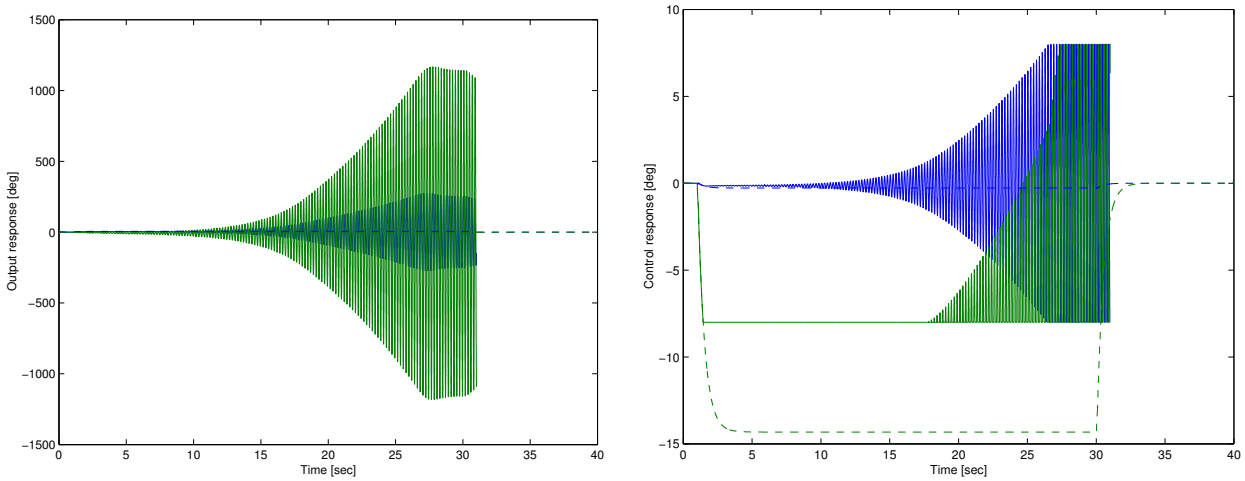

Figure 13: Uncertain Saturated system + Static AW compensator

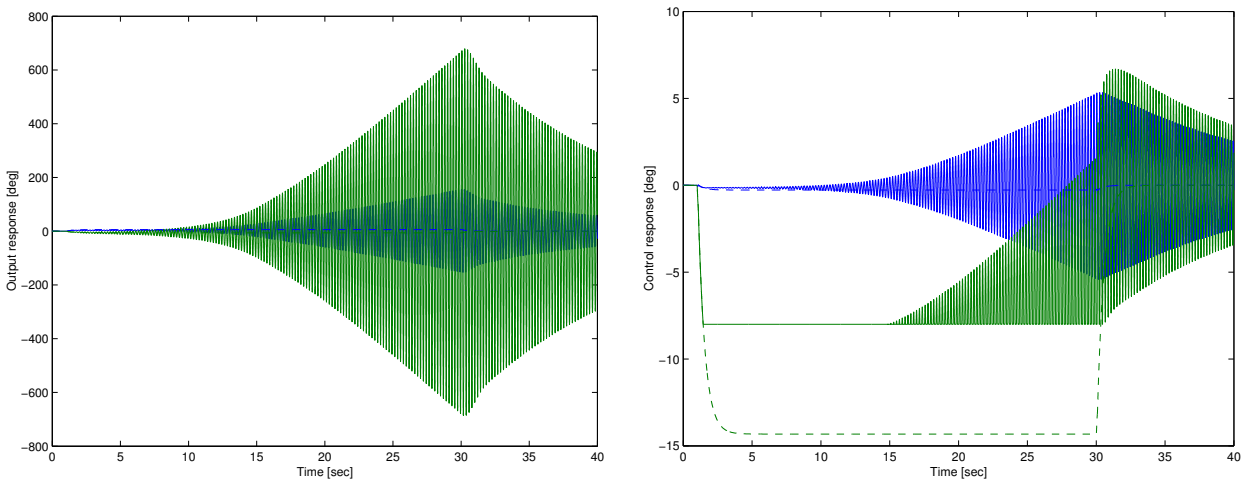

Figure 14: Uncertain Saturated system + Low-order AW compensator

is always desired, sometimes it is neccessary to compromise performance in order to achieve robust stability. In the LMI fomulation given in [23], such a trade-off is hidden within the optimisation.

It is interesting to note how the design of AW compensators is completely independent from the controller $K(s)$ if no uncertainties are present. However, when uncertainties are introduced, this is no longer the case and a small adjustment of the linear loop may enhance robustness of the saturated closed-loop plant. Recently the *weakened* AW problem has been proposed in [4]. This attempts to improve robustness at the expense of adjusting the linear loop, which has the potential to achieve greater robust stability (see also [9]).

References

[1] S. Crawshaw. Global and local analysis of coprime-factor based anti-windup for stable and unstable plants. *Proc. European Control Conference*, 2003.

[2] S. Crawshaw and G. Vinnicombe. Anti-windup synthesis for guaranteed $\mathcal{L}_2$ performance. *Proc. IEEE Conf. on Decision and Control*, 2000.

[3] C. Edwards and I. Postlethwaite. Anti-windup and bumpless transfer schemes. *Automatica*, 34(2):199–210, 1998.

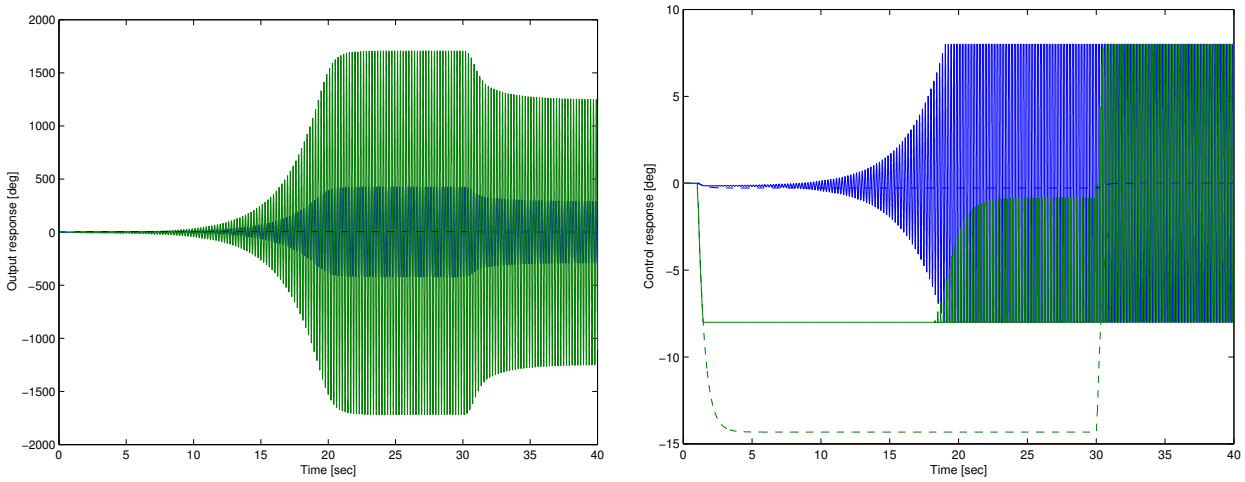

Figure 15: Uncertain Saturated system + Full-order LMI based robust AW compensator

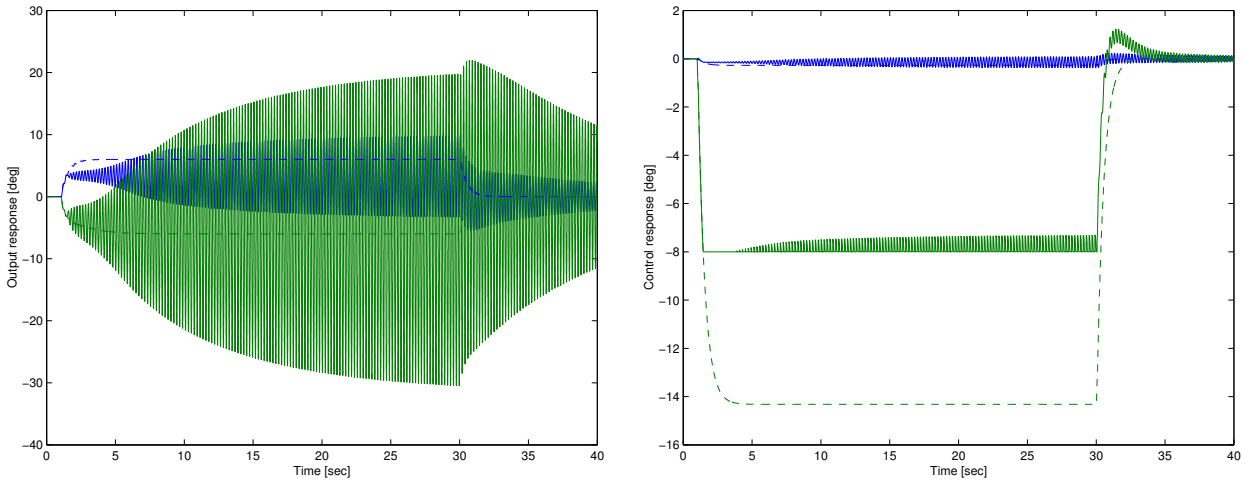

Figure 16: Uncertain Saturated system + Full-order Riccati based robust AW compensator

[4] S. Galeani, S. Nicosa, A.R. Teel, and L. Zaccarian. Output feedback compensators for weakened anti-windup of additively perturbed systems. In *Proc. IFAC World Congress*, Prague, 2005.

[5] M. Green and D.J.N. Limebeer. *Linear Robust Control*. Prentice Hall, New Jersey, 1996.

[6] G. Grimm, J. Hatfield, I. Postlethwaite, A.R. Teel, M.C. Turner, and L. Zaccarian. Anti-windup for stable linear systems with input saturation: an LMI based synthesis. *IEEE Transactions on Automatic Control*, 48(9):1509–1525, 2003.

[7] G. Herrmann, M.C. Turner, and I. Postlethwaite. Pratical implementation of a novel anti-windup scheme in a hdd-dual-stage servo-system. *IEEE/ASME Transactions on Mechatronics*, 9(3):580–592, 2004.

[8] M.V. Kothare, P.J. Campo, M. Morari, and C.N. Nett. A unified framework for the study of anti-windup designs. *Automatica*, 30(12):1869–1883, 1994.

[9] A. Marcos, M.C. Turner, D.G. Bates, and I. Postlethwaite. Robustification of static and low-order anti-windup designs. *IFAC Symposium on Robust Controller Design*, submitted.

[10] S. Miyamoto and G. Vinnicombe. Robust control of plants with saturation nonlinearity based on comprime factor representations. *Proc. IEEE Conf. on Decision and Control*, pages 2838–2840, 1996.

[11] E.F. Mulder, M.V. Kothare, and M. Morari. Multivariable anti-windup controller synthesis using linear matrix inequalities. *Automatica*, 37(9):1407–1416, 2001.

[12] T. Nguyen and F. Jabbari. Disturbance attenuation for systems with input saturation: an LMI approach. *IEEE Trans. Automatic Control*, 44(4):852–857, 1999.

[13] A.A. Rodriguez and J. R. Cloutier. Control of a bank-to-turn missile with saturating actuators. *Proc. American Control Conference*, 1994.

[14] B.G. Romanchuk. Some comments on anti-windup synthesis using LMI's. *International Journal of Robust and Nonlinear Control*, 9(10):717–734, 1999.

[15] A. Saberi, Z. Lin, and A.R. Teel. Control of linear systems with saturating actuators. *IEEE Trans. on Automatic Control*, 41(3):368–378, 1996.

[16] M. Saeki and N. Wada. Synthesis of a static anti-windup compensator via linear matrix inequalities. *International Journal of Robust and Nonlinear Control*, 12:927–953, 2002.

[17] S. Skogstad and I. Postlethwaite. *Multivariable feedback control: analysis and design*. Wiley, Chichester, England, 2nd edition, 2006.

[18] J. Sofrony, M.C. Turner, and I. Postlethwaite. Anti-windup synthesis using Riccati equations. In *Proc. IFAC World Congress*, Prague, 2005.

[19] J. Sofrony, M.C. Turner, I. Postlethwaite, O.M. Brieger, and D. Leissling. Anti-windup synthesis for PIO avoidance in an experimental aircraft. In *IEEE Conference on Decision and Control*, submitted.

[20] S. Tarbouriech and G. Garcia. *Control of Uncertain Systems with Bounded Inputs*. Springer-Verlag, London, 1997.

[21] S. Tarbouriech, J.M. Gomes da Silva Jr., and G. Garcia. Delay-dependent anti-windup strategy for linear systems with saturating inputs and delayed outputs. *International Journal of Robust and Nonlinear Control*, 14(7):665–82, 2004.

[22] A.R. Teel and N. Kapoor. The $\mathcal{L}_2$ anti-windup problem: Its definition and solution. *Proc. European Cont. Conf.*, 1997.

[23] M.C. Turner, G. Herrmann, and I. Postlethwaite. Accounting for robustness in anti-windup synthesis. In *Proc. American Control Conference*, Boston, 2004.

[24] M.C. Turner, G. Herrmann, and I. Postlethwaite. Improving robustness in anti-windup synthesis. *submitted*, 2005.

[25] M.C. Turner and I. Postlethwaite. A new perspective on static and low order anti-windup synthesis. *International Journal of Control*, 77(1):27–44, 2004.

[26] P.F. Weston and I Postlethwaite. Analysis and design of linear conditioning schemes for systems containing saturating actuators. *IFAC Nonlinear Control System Design Symposium*, 1998.

[27] P.F. Weston and I Postlethwaite. Linear conditioning for systems containing saturating actuators. *Automatica*, 36(9):1347–1354, 2000.

[28] F. Wu and M. Soto. Extended anti-windup control schemes for LTI and LFT systems with actuator saturations. *International Journal of Robust and Nonlinear Control*, 14(15):1255–1281, 2004.

[29] L. Zaccarian and A.R. Teel. A common framework for anti-windup, bumpless transfer and reliable designs. *Automatica*, 38:1735–1744, 2002.